Journal of Science-FAS-SEUSL (2025) 06(02) 97-114
ISSN:2738-2184

The Novel Group Chain Acceptance Sampling Plan Using Minimum Angle Method for Non-Symmetrical Data Using Quartiles

Haalisha Aboobucker* and Dingiri Appulage Tharanga Madumali Kumari

Department of Mathematical Sciences, Faculty of Applied Sciences, South Eastern University of Sri Lanka 32200

*haalisha90@seu.ac.lk

Abstract

This paper suggests a Group Chain Acceptance Sampling Plan (GChSP-1) for non-symmetrical data under truncated life testing. Two types of risks arise in statistical quality control: producer's risk and consumer's risk. The Minimum Angle Method (MAM) is applied when designing the sampling plan to control and reduce these risks in a balanced manner. The original GChSP-1, developed in 2015, primarily addressed the producer's risk. Later, in 2022, MAM was incorporated using the mean as the quality parameter, which is more appropriate for symmetrical data, and in 2023, GChSP-1 for non-symmetrical data was extended with the median. As a further extension, this study proposes a GChSP-1 with MAM incorporated with the 3rd quartile. The performance of the 3rd quartile is compared with that of the median. All results were obtained using Sci-Lab programming software, and the results align with the previous studies**.** The optimal number of groups increases when the shape parameter and quartile ratio increase. Even though specified constant, number of preceding lots, and number of items per group increase, the optimal number of groups decreases. Notably, the 3rd quartile yields the smallest optimal number of groups, suggesting that it serves as a more effective quality parameter for GChSP-1 than the median. The suggested plan offers a valuable alternative for industrial inspection processes, allowing practitioners to select the most suitable plan based on specific requirements.

Keywords: Consumer's Risk, Group Chain Sampling Plan, Minimum Angle Method, Producer's Risk

1. Introduction

Acceptance Sampling is a statistical method used to evaluate the quality of products by inspecting a randomly selected sample rather than examining each individual items in a large batch. One significant classification of acceptance sampling is variables and attributes (Montgomery, 2009). The first acceptance sampling plan was developed by Epstein in 1954, which was known as the single sampling plan (SSP). This sampling strategy has two drawbacks: (1) when the acceptance number is set to be zero or one, the probability of accepting the lot decreases rapidly, and (2) the SSP does not indicate multiple inspections. To overcome these limitations, in 1955, the ChSP-1 was developed by Dodge as an alternative to SSP. Neither the SSP nor the ChSP-1 are not capable of multiple inspections. Multiple inspection is an effective approach in acceptance sampling because it groups sampling units, which helps reduce both inspection time and cost. Therefore, to address the gap of multiple inspections, the group sampling plan (GSP) was constructed by Aslam and Jun in 2009. Later, Mughal (2015) extended the idea by integrating the group concept with the ChSP-1, leading to the development of the Group Chain Sampling Plan (GChSP-1). Among the different attribute acceptance

Corresponding Author: haalisha90@seu.ac.lk

sampling plans, GChSP-1 is considered an efficient alternative to the earlier acceptance sampling methods.

There are two risks associated with acceptance sampling, namely, the producer's risk, α and the consumer's risk, β (Montgomery, 2009). Most researchers, when creating sampling plans, tend to focus more on minimizing the consumer's risk, while paying less attention to minimizing the producer's risk. This approach was common until 1997 when Soundararajan and Christina introduced the Minimum Angle Method (MAM), a method that aims to minimize the both risks (Soundararajan & Christina, 1997), (Teh, Aziz, & Zain, 2021). However, it's crucial in quality control and product development to consider and minimize both consumer's and producer's risks. This ensures a well-rounded approach that protects against the negative outcomes of both types of risks.

In truncated life testing, acceptance sampling plans are used to determine whether the lifetime or the durability of a product is equal to or greater than a pre-defined (hypothesized) value of time. When developing these plans, the average life of devices is often considered by assuming that data follow symmetrical distributions. However, in situations where the data doesn't follow a symmetrical pattern, other quality parameters, like median, quartiles, or percentiles, should be considered to address the non-symmetrical nature of the data (Gupta, 1962).

2. Literature Review

Acceptance Sampling plays an important role in quality control by determining whether a production lot should be accepted or rejected based on the inspection of a sample. Epstein (1954) is recognized as the first researcher to introduce the Single Acceptance Sampling Plan (SSP) for lifetime testing of attributes. However, the SSP has two major limitations. First, when the acceptance number is set to be zero or one, the probability of accepting the lot drops rapidly. Second, the SSP does not support multiple inspections. Dodge (1955) proposed the Chain Sampling Plan (ChSP-1) as an alternative to the traditional Single Acceptance Sampling Plan (SSP), which has zero acceptance numbers. Besides that, Mughal et al. (2015b) proposed ChSP-1 for the Pareto distribution of the 2nd kind. In traditional sampling plans like SSP and ChSP, only a single item is tested at a time. However, to address this limitation, Aslam and Jun (2009) introduced the Group Sampling Plan (GSP), which allows for testing multiple items as a group simultaneously. This approach improves efficiency in the inspection process. Building on this concept, Mughal et al. (2015) introduced a novel sampling approach known as Group Chain Sampling Plan (GChSP), which combines the principles of ChSP-1 and GSP for the Pareto Distribution of the 2nd kind. Teh et al. (2018) proposed the GChSP for the Exponential Distribution and conducted a comparison of the performance of GSP and GChSP for the Exponential Distribution by minimizing the consumer's risk.

Most of these earlier studies primarily focused on minimizing the consumer's risk while giving limited attention to the producer's risk. Soundararajan and Christina (1997) designed a variable single sampling plan for specified values of the sample size n, the acceptable quality level, and the limiting quality level using the Minimum Angle Method (MAM). Their approach aimed to minimize both consumer's and producer's risks. This provides an alternative to Epstein's (1954) Single Sampling Plan (SSP), which focused solely on minimizing the consumer's risk. Recently,

Teh et al. (2021) developed GChSP-1 for the Generalized Exponential Distribution using MAM which was identified as a better acceptance sampling procedure.

Another key factor in designing acceptance sampling plans is the selection of an appropriate quality parameter that reflects the nature of the data. Commonly, the mean is taken as the quality parameter for the life testing by assuming that the data have symmetrical behavior. Practically, the data does not always hold the symmetrical property. Recognizing this issue, Gupta (1962) developed a life testing plan for normal and log-normal distributions based on the mean and median to obtain the minimum sample size when the data exhibit non-symmetrical behavior. Rao et al. (2012) focused on percentiles and developed a time-truncated test plan based on the Inverse Rayleigh Distribution to minimize the specified consumer's risk. A TSGChSP has been developed by Zain and Aziz (2019) to address the non-symmetrical property of the Pareto Distribution of 2nd Kind by satisfying the consumer's risk at several values of the median ratio.

More recently, Teh et al. (2022) focused on a novel family of GChSP, which comprised six different GChSP using MAM, but this study was still based on the mean rather than considering other possible measures. Thus, Aboobucker (2023) wanted to address this issue by minimizing both the risks and handling the median as the quality parameter for the non-symmetrical data. She introduced a novel family of GChSP-1 designed for life testing when assessing the specified median life and compared the performance of the median with the findings of Teh (2022). She discovered that the median, which is the 2nd quartile, performs better than the mean for Generalized Exponential Distribution under different operating characteristic values (Aboobucker, 2023). Even though the most important gap has been satisfied by Aboobucker (2023), the comparison between the median and other quartiles was not done in her study. Thus, this study focuses on choosing the most effective quality parameter in both the median and the 3rd quartile using MAM for non-symmetrical data with the generated Sci-Lab coding.

The Minimum Angle Method

Soundararajan and Christina (1997) are referred to as the first researchers who applied MAM. They developed a variable acceptance sampling plan based on MAM. This method involves considering both producer's and consumer's risks in the development of an acceptance sampling plan. Simply, MAM considers the tangent angle between lines AB and AC in the OC curve, where A≡ $(p_1, 1-\alpha)$ and B ≡ (p_2, β) as shown in Figure 1. Further, $p_1$and p_2 represent the lot fraction defectives at AQL and LQL, respectively.

Using Figure 1, the tangent angle can be obtained by;

$$\tan\theta = \frac{p_2 - p_1}{L(p_1) - L(p_2)}$$

Therefore, the angle is;

$$\theta = \tan^{-1}\left|\frac{p_2 - p_1}{L(p_1) - L(p_2)}\right| \qquad (1)$$

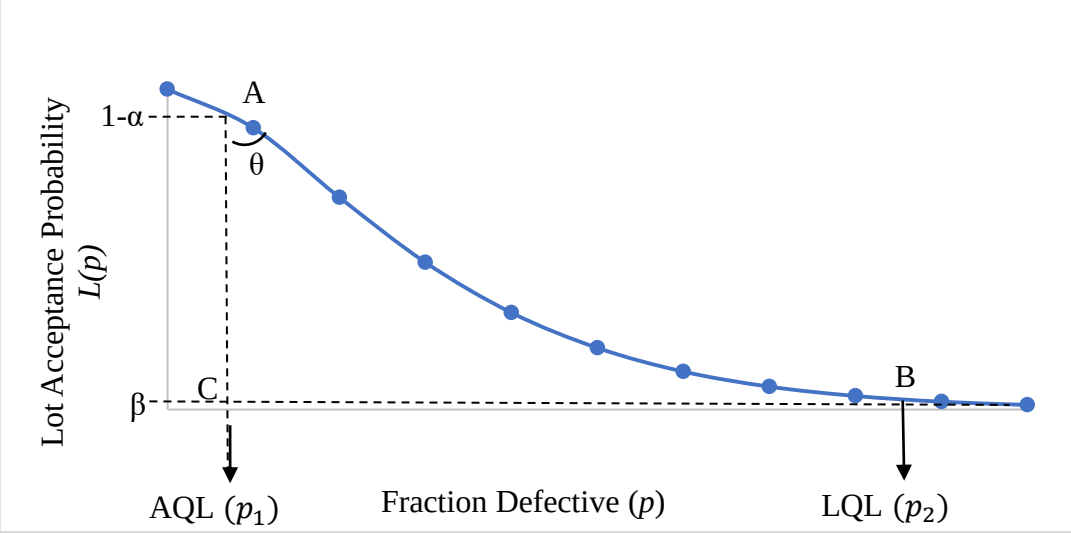

Figure 1: The Minimum Angle Method. Extracted From "New Family of Group Chain Acceptance Sampling Plans (GChSP) Using Minimum Angle Method (MAM) for Non-symmetrical Data. (Unpublished Master dissertation.) by H. M. Aboobucker, Z. Zain and N. Aziz, 2023, Universiti Utara Malaysia, Sintok, Kedah, Malaysia.

3. Methodology

The methodology and the design for GChSP-1 involve six steps, and it is summarized in Table 1 (Aboobucker, 2023).

Table 1: Steps in designing the GChSP-1

Phase I	Identification of design parameters
Phase II	Implementing the operating procedure
Phase III	Determining the probability of lot acceptance
Phase IV	Determining the probabilities for zero and one Defectives
Phase V	Determining the fraction defective for Generalized Exponential Distribution
Phase VI	Measuring the performance

Phase I: Identification of Design Parameters

The design parameters for GChSP are: producer's risk (α), consumer's risk (β), specified constant (a), number of preceding lots (i), number of items (r), and the 3rd quartile ratio $\left(\frac{Q}{Q_0}\right)$. These design parameters in Table 2 are used to determine whether the true 3rd quartile life of the item (Q) is greater than the specified 3rd quartile life of the item (Q_0).

Table 2: Pre-specified Values for the design parameters for GChSP-1

Design Parameters								
Producer's risk, α	0.10							
Consumer's risk, β	0.10							
Specified constant, a	0.25	0.50	0.75	1.00	1.25	1.50	1.75	2.00
Number of preceding lots, i	1	2	3	4				
Number of items,r	2	3	4	5				
3rd Quartile ratio at the AQL	2	4	6	8	10	12		
3rd Quartile ratio at the LQL	1							

Phase II: Implementing the operating procedure

The operating procedure is the most important component in the acceptance sampling plan. The sampling plan is designed step by step in this phase. Table 3 contains the operating procedure for the proposed sampling plan.

Table 3: The operating procedure for GChSP-1

Step 1	Finding the optimal number of groups (g) using MAM.
Step 2	Allocating the r number of items for each group.
Step 3	Specifying the test termination time t_0.
Step 4	Conducting the inspection procedure and finding number of defectives (d).
Step 5	Accept the current lot if $d = 0$ and reject the current lot if $d > 1$.
Step 6	Accept the current lot if $d = 1$, provided that no defectives recorded in the preceding i lots.

Phase III: Determining the probability of lot acceptance

Figure 2 illustrates the tree diagram for the lot acceptance criteria for the GChSP-1 when there are two preceding lots. D and $\overline{D}$ represent defectives and non-defectives, respectively. This tree diagram can be used to derive the probability of lot acceptance for GChSP-1.

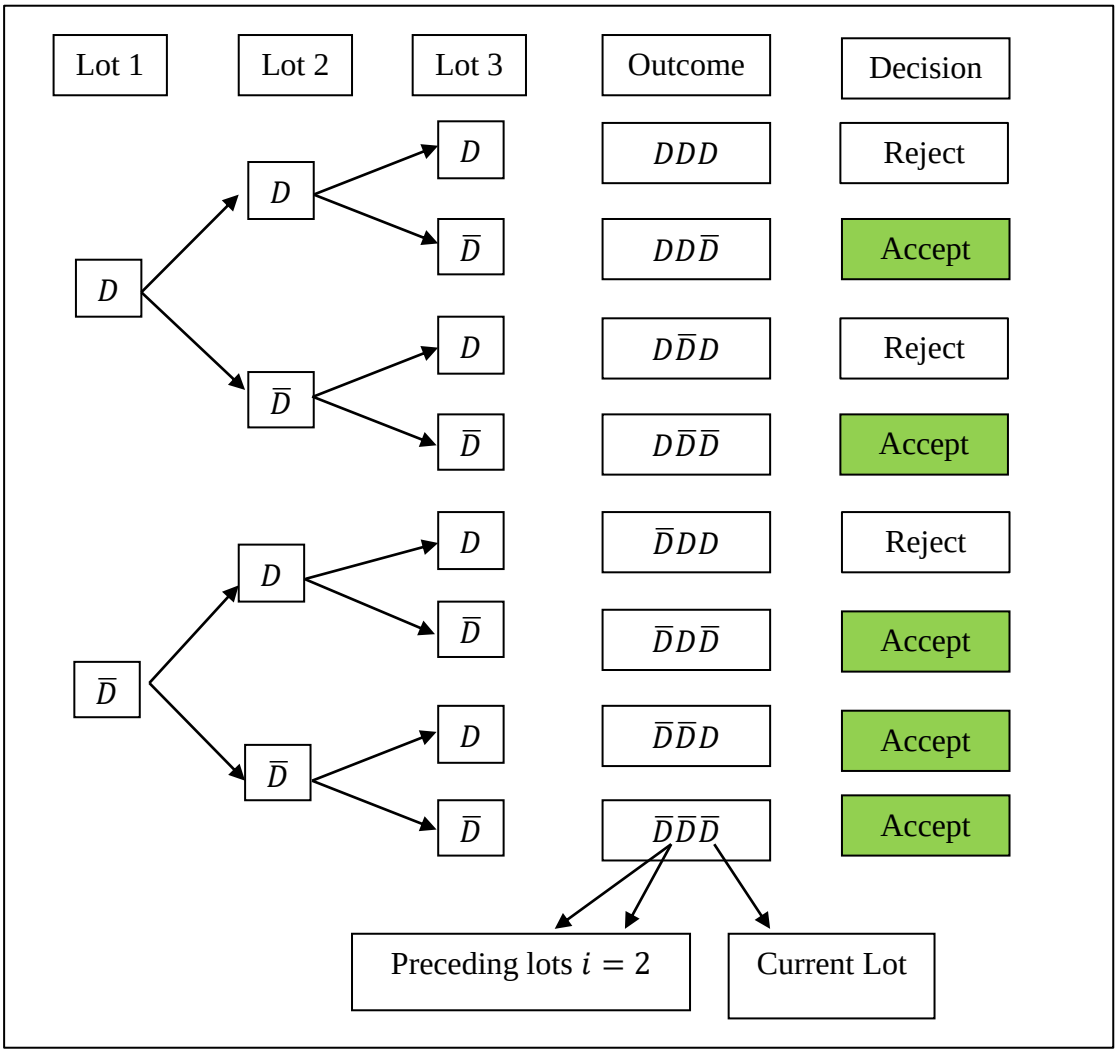

Figure 2: Tree diagram for the GChSP-1

There are five cases where the lot can be accepted, namely, $DD\overline{D}$, $D\overline{D}\overline{D}$, $\overline{D}D\overline{D}$, $\overline{D}\overline{D}D$ and $\overline{D}\overline{D}\overline{D}$. From that, the probability of lot acceptance for the GChSP-1 can be obtained as equation (2), where, P_0 and P_1 represent the probability of zero and one defective, respectively.

$$L(p)_{GChSP-1} = P_0P_0P_0 + P_0P_0P_1$$
$$L(p)_{GChSP-1} = P_0 + (P_0)^2P_1 \quad (2)$$

Equation (2) is derived for the number of preceding lots, $i = 2$. Then, generally for i preceding lots, the probability of lot acceptance for GhSP-1can be written as;

$$L(p)_{GChSP-1} = P_0 + (P_0)^iP_1 \quad (3)$$

Phase IV: Determining the probability of zero and one defectives

Probability of zero defects, P_0 implies the possibility of having no defects in the sample. Similarly, the probability of one defective, P_1 is the possibility of having exactly one defect in the sample. Both probabilities are essential in GChSP-1, as the acceptance criteria are determined by the occurrence of zero or one defect in the samples. Based on Figure 2, it can be derived that if no defects are found in the current sample, the lot is accepted. However, if one defect is found in the current sample, the lot can still be accepted provided that no defects were observed in the previous lot.

The P_0 and P_1 are derived as equations (4) and (5) using the binomial distribution, where g is the optimal number of groups, r is the number of items in each group, and the p is the fraction defective of the batch of items.

$$P_0(p) = \binom{gr}{0} * p^0 * (1-p)^{gr-0}$$
$$P_0(p) = (1-p)^{gr} \quad (4)$$

$$P_1(p) = \binom{gr}{1} * p^1 * (1-p)^{gr-1}$$
$$P_1(p) = (grp) * (1-p)^{gr-1} \quad (5)$$

Upon the simplification and the substitution of equations (4) and (5) into equation (3), the lot acceptance probability can be obtained.

$$L(p)_{GChSP-1} = (1-p)^{gr}\left[1 + \frac{grp(1-p)^{gri}}{(1-p)}\right] \quad (6)$$

The optimal number of groups, g is obtained at the AQL and LQL. Let $L(p_1)$ and $L(p_2)$ represent the probabilities at AQL and LQL, respectively. Then,

$$L(p_1) \geq 1 - \alpha \quad (7)$$
$$L(p_2) \leq \beta \quad (8)$$

Phase V: Determining the fraction defective for Generalized Exponential Distribution

The cumulative density function (CDF) of the generalized exponential distribution is given by;

$$p = \left[1 - exp\left(-\frac{t}{\sigma}\right)\right]^{\lambda}, t > 0, \lambda > 0 \quad (9)$$

σ and λ represent the scale and shape parameters, respectively.

The pth Quartile point of the generalized exponential distribution is given by;

$$\theta_p = -\sigma \ln(1 - p^{1/\lambda}) \quad (10)$$

Then Equation (10) can be replaced in terms of the 3rd quartile (Q);

$$Q = -\sigma \ln(1 - (0.75)^{1/\lambda}) \quad (11)$$

Using equation (10) the scale parameter σ can be isolated as follows;

$$\sigma = \frac{\theta_p}{-\ln(1 - p^{1/\lambda})} \quad (12)$$

Furthermore, the test termination time, t_0 can be defined as the product of a specified constant, a and specified quartile life, Q_0; and it can be written as;

$$t = aQ_0 \quad (13)$$

Finally, the fraction defective for generalized exponential distribution can be obtained in the terms of 3rd quartile as follows.

$$p = \left[1 - exp\left(-\frac{aQ_0}{\frac{Q}{-\ln(1 - 0.75^{1/\lambda})}}\right)\right]^{\lambda} \quad (14)$$

Using the rules of logarithm equation (14) can be simplified as accordingly.

$$p = \left[1 - \left[(1 - 0.75^{\left(\frac{1}{\lambda}\right)}\right]^{\left(\frac{a}{Q/Q_0}\right)}\right]^{\lambda} \quad (15)$$

The calculation of the fraction defective, p, is conducted at both the AQL and the LQL. Specifically, the fraction defective at the AQL is represented as p_1, and it is computed with various 3rd quartile ratio values $\left(\frac{Q}{Q_0}\right)$ such as 2, 4, 6, 8, 10, and 12. Conversely, the fraction defective at the LQL is denoted as p_2 and is determined when the 3rd quartile ratio $\left(\frac{Q}{Q_0}\right)$ is fixed at 1.

Phase VI: Measuring the performance

In this study, the evaluation of the performance of the proposed novel GChSP-1 involves obtaining the optimal number of groups through various combinations of design parameters. Secondly, this study focuses on understanding how specific design parameters, such as the

specified constant (a), the number of preceding lots (i), the 3rd quartile ratio$\left(\frac{Q}{Q_0}\right)$, and the number of items (r), influence the optimal number of groups.

4. Results and Discussion

The optimal number of groups is proportional to the shape parameter of generalized exponential distribution based on the results (Tables 4-6). The shape parameter λ increases from 1 to 3 the number of groups increases from 5 to 53, while the other parameters remain constant $\left(a = 0.25, i = 1, r = 2, \frac{Q}{Q_0} = 12\right)$. The angle created by 5 groups is 16.75498° and the angle for 53 groups is 5.20496°. Applying the minimum angle theory leads to the conclusion that choosing 53 groups is more effective than selecting 5 groups, as it yields the smallest angle.

The second finding involves measuring the performance of the sampling plan when there is a change in the specified constant. The specified constant is increasing from 0.25 to 2, the optimal number of groups is decreasing from 19 to 1, while the other parameters are set to be $\left(\lambda = 2, i = 1, r = 2, \frac{Q}{Q_0} = 12\right)$. Therefore, it can be concluded that the optimal number of groups is inversely proportional to the specified constant of generalized exponential distribution, which obeys Teh (2022) and Aboobucker (2023).
The respective angles created by 19 groups and one group are 8.836903°and 42.35615°. This implies that 19 groups produce a smaller angle than one group. The reduction of the number of groups reduces the inspection cost, but it increases the time for the inspection. That implies 19 groups require less inspection time than one group. Since the angle created by 19 groups is small, it effectively differentiates the good and bad lots from the other.

The next finding concludes that the produced optimal number of groups is proportional to the 3rd quartile ratio. For instance, while the design parameters are set to be $(\lambda = 2, i = 1, r = 2, a = 0.25)$. Whenever the quartile ratio is increasing from 6 to 12, the optimal number of groups is increasing from 13 to 19, with the corresponding angles 8.92143° and 8.836903° respectively.

Finally, the performance of the sampling plan is measured by the changes in the number of preceding lots (i) and the number of items (r). The number of groups is inversely proportional to the number of preceding lots (i) and the number of items (r). For example, the optimal number of groups is 19 when $\left(\lambda = 2, i = 1, r = 2, a = 0.25, \frac{Q}{Q_0} = 12\right)$. And when the number of preceding lots and the number of items increased to 4 and 5, respectively, the optimal number of groups is equal to 7 while other parameters remain constant. From Table 4-6, there are many missing values marked by (-). This is because at one particular design parameter, the producer's risk, α and the consumer's risk, β fails to satisfy the condition as stated in Phase IV, that is, both α and β are set to be less than or equal to 0.1 no optimal groups can be found.

As a demonstration of the proposed sampling plan, let us assume an experimenter hypothesizes that the lifetime of a product follows a generalized exponential distribution. The aim is to determine whether the actual 3rd quartile life of the product is at least 1000 hours. If the

experiment is structured with the design parameters $\left(\lambda = 1, \frac{Q}{Q_0} = 12, i = 1, r = 2, a = 0.25\right)$, the optimal number of groups is 5. From that, the conclusion can be made that the experimenter should randomly select a sample of 10 items from the lot and assign two products to each group. The lot can be accepted when no defective found in the current sample within a 250-hour period of testing time, and further, the lot can be accepted if one defective item is recorded with no defective items observed in the previous lot.

Table 4: Optimal number of groups for GChSP-1 when $\lambda = 1$

Generalized Exponential Distribution, λ = 1										
			Specified Constant, α							
3rd Quartile Ratio	i	r	0.25	0.50	0.75	1.0	1.25	1.50	1.75	2.0
2	1 2 3 4	2 3 4 5	- - - -	- - - -	- - - -	- - - -	- - - -	- - - -	- - - -	- - - -
4	1 2 3 4	2 3 4 5	- - - -	- - - -	- - - -	- - - -	- - - -	- - - -	- - - -	- - - -
6	1 2 3 4	2 3 4 5	- - - -	- - - -	- - - -	- - - -	- - - -	- - - -	- - - -	- - - -
8	1 2 3 4	2 3 4 5	- - - -	- - - -	- - - -	- - - -	- - - -	- - - -	- - - -	- - - -
10	1 2 3 4	2 3 4 5	4 (17.04067°) - - -	2 (27.14387°) - - -	- - - -	1 (36.36634°) - - -	- - - -	- - - -	- - - -	- - - -
12	1 2 3 4	2 3 4 5	5 (16.75498°) - - -	2 (27.15349°) - - -	- - - -	1 (36.62911°) - - -	1 (37.94919°) - - -	- - - -	- - - -	- - - -

Table 5: Optimal number of groups for GChSP-1 when $\lambda = 2$

Generalized Exponential Distribution, λ = 2										
			Specified Constant, α							
3rd Quartile Ratio	i	r	0.25	0.50	0.75	1.0	1.25	1.50	1.75	2.0
2	1 2 3	2 3 4	- - -	- - -	- - -	- - -	- - -	- - -	- - -	- - -
	4	5	-	-	-	-	-	-	-	-
4	1	2	10 (9.18541°)	3 (22.44308°)	-	-	-	-	-	-
	2	3	5 (9.566894°)	-	-	-	-	-	-	-
	3	4	-	-	-	-	-	-	-	-
	4	5	-	-	-	-	-	-	-	-
6	1	2	13 (8.92143°)	4 (21.9216°)	2 (30.97385°)	1 (37.10598°)	1 (38.63104°)	-	-	-
	2	3	8 (9.07136°)	2 (22.47268°)	1 (31.86509°)	-	-	-	-	-
	3	4	6 (9.207223°)	2 (22.82017°)	1 (32.1746°)	-	-	-	-	-
	4	5	4 (9.304723°)	1 (23.32907°)	-	-	-	-	-	-

Generalized Exponential Distribution, λ = 2										
			Specified Constant, *a*							
3rd Quartile Ratio	*i*	*r*	0.25	0.50	0.75	1.0	1.25	1.50	1.75	2.0
8	1	2	15 (8.856659°)	5 (21.80655°)	3 (31.01803°)	2 (36.37643°)	1 (39.23043°)	1 (40.41526°)	1 (41.29709°)	-
	2	3	9 (8.936056°)	3 (22.03485°)	2 (31.57598°)	1 (36.63474°)	1 (40.21145°)	-	-	-
	3	4	7 (9.003534°)	2 (22.22428°)	1 (31.57186°)	1 (37.7408°)	-	-	-	-
	4	5	5 (9.058221°)	2 (22.57433°)	1 (31.98503°)	-	-	-	-	-
10	1	2	17 (8.839718°)	5 (21.78146°)	3 (30.93369°)	2 (36.33884°)	1 (39.69176°)	1 (40.83056°)	1 (41.59807°)	1 (42.09574°)
	2	3	11 (8.885666°)	3 (21.92853°)	2 (31.20555°)	1 (36.63257°)	1 (39.80578°)	1 (42.11779°)	-	-
	3	4	8 (8.925434°)	2 (22.08966°)	1 (31.47567°)	1 (37.04024°)	1 (41.19145°)	-	-	-
	4	5	6 (8.957735°)	2 (22.15427°)	1 (31.49749°)	1 (37.99526°)	-	-	-	-
12	1	2	19 (8.836903°)	6 (21.77804°)	3 (30.96325°)	2 (36.41433°)	2 (39.68166°)	1 (41.16596°)	1 (41.91368°)	1 (42.35615°)
	2	3	12 (8.865236°)	4 (21.87728°)	2 (31.10882°)	1 (36.7216°)	1 (39.73382°)	1 (41.77706°)	1 (43.26068°)	-
	3	4	8 (8.890977°)	3 (21.97053°)	1 (31.49714°)	1 (36.80435°)	1 (40.50193°)	1 (43.2452°)	-	-
	4	5	7 (8.913769°)	2 (22.0078°)	1 (31.33935°)	1 (37.32721°)	1 (41.68112°)	-	-	-

Table 6: Optimal number of groups for GChSP-1 when $\lambda = 3$

Generalized Exponential Distribution, λ = 3										
			Specified Constant, a							
3rd Quartile Ratio	i	r	0.25	0.50	0.75	1.0	1.25	1.50	1.75	2.0
2	1 2 3 4	2 3 4 5	- - - -	- - - -	- - - -	- - - -	- - - -	- - - -	- - - -	- - - -
4	1 2 3 4	2 3 4 5	25 (5.221779°) 15 (5.28441°) 11 (5.336538°) 8 (5.383017°)	5 (18.79013°) 3 (19.11555°) 2 (19.41603°) 2 (19.74146°)	2 (29.99683°) 1 (31.02259°) 1 (31.04615°) -	1 (36.91753°) - - -	1 (38.74499°) - - -	- - - -	- - - -	- - - -
6	1 2 3 4	2 3 4 5	34 (5.193708°) 21 (5.208256°) 15 (5.220902°) 12 (5.231881°)	7 (18.66036°) 4 (18.76136°) 3 (18.83174°) 2 (18.96286°)	3 (29.83°) 2 (30.03893°) 1 (30.4965°) 1 (30.34824°)	2 (36.33148°) 1 (36.62098°) 1 (37.12175°) 1 (38.19557°)	1 (39.74591°) 1 (40.36738°) - -	1 (40.91969°) - - -	1 (41.71576°) - - -	- - - -

Generalized Exponential Distribution, λ = 3										
			Specified Constant, *a*							
3rd Quartile Ratio	*i*	*r*	0.25	0.50	0.75	1.0	1.25	1.50	1.75	2.0
8	1	2	42 (5.19793°)	9 (18.68089°)	4 (29.90788°)	2 (36.51338°)	2 (40.09384°)	1 (41.60806°)	1 (42.25726°)	1 (42.57297°)
	2	3	26 (5.202329°)	5 (18.71412°)	2 (30.01313°)	1 (36.82737°)	1 (40.1382°)	1 (42.23526°)	1 (43.77269°)	-
	3	4	19 (5.206236°)	4 (18.73883°)	2 (30.0833°)	1 (36.72946°)	1 (40.71588°)	1 (43.6098°)	-	-
	4	5	15 (5.209852°)	3 (18.76256°)	1 (30.23661°)	1 (36.99736°)	1 (41.63166°)	-	-	-
10	1	2	48 (5.202237°)	10 (18.7034°)	4 (29.96961°)	3 (36.64449°)	2 (40.19479°)	1 (42.04838°)	1 (42.74203°)	1 (43.04413°)
	2	3	30 (5.203866°)	6 (18.71606°)	3 (30.00275°)	2 (36.72538°)	1 (40.25772°)	1 (42.15154°)	1 (43.29547°)	1 (44.11951°)
	3	4	22 (5.205344°)	5 (18.72974°)	2 (30.02597°)	1 (36.75093°)	1 (40.42174°)	1 (42.68651°)	1 (44.35086°)	-
	4	5	17 (5.206715°)	4 (18.74238°)	2 (30.10025°)	1 (36.79194°)	1 (40.77113°)	1 (43.47782°)	-	-
12	1	2	53 (5.20496°)	11 (18.71919°)	5 (30.0067°)	3 (36.70667°)	2 (40.30825°)	2 (42.22956°)	1 (43.06191°)	1 (43.40802°)
		3	34	7	3	2	1	1	1	1

	2 3 4	 4 5 	(5.205663°) 24 (5.206305°) 19 (5.206903°)	(18.72474°) 5 (18.72978°) 4 (18.73449°)	(30.02147°) 2 (30.03911°) 2 (30.05562°)	(36.73852°) 1 (36.80993°) 1 (36.77776°)	(40.37646°) 1 (40.40156°) 1 (40.54452°)	(42.23449°) 1 (42.45864°) 1 (42.82033°)	(43.26737°) 1 (43.75064°) 1 (44.45808°)	(43.88374°) 1 (44.74928°) 1 (45.94674°)

The results obtained for the novel GChSP-1 with 3rd quartile is then compared with the GChSP-1 with the median (which is the 2nd quartile). The summary table is shown in following Table 7.

Table 7: Comparison on g and θ for GChSP-1 for 3rd Quartile and Median

	λ=1		λ=2		λ=3	
a	Median	3rd Quartile	Median	3rd Quartile	Median	3rd Quartile
0.25	10 (9.368341°)	5 (16.75498°)	46 (3.984866°)	19 (8.836903°)	98 (1.979615°)	34 (5.193708°)
0.50	5 (16.75498°)	2 (27.14387°)	13 (11.84188°)	6 (21.77804°)	18 (9.202207°)	7 (18.66036°)
0.75	3 (22.48811°)	-	6 (19.81252°)	3 (30.93369°)	7 (18.38568°)	3 (29.83°)
1.00	2 (27.14387°)	1 (36.36634°)	4 (26.37717°)	2 (36.33884°)	4 (26.3774°)	2 (36.33148°)
1.25	2 (30.07202°)	1 (37.94919°)	3 (31.32137°)	1 (38.63104°)	2 (32.21992°)	1 (38.74499°)
1.50	-	-	2 (34.78513°)	1 (40.41526°)	2 (36.13041°)	1 (40.91969°)
1.75	-	-	2 (37.42916°)	1 (41.29709°)	1 (38.01441°)	1 (41.71576°)
2.00	1 (36.36634°)	-	1 (38.45733°)	1 (42.09574°)	1 (40.12043°)	1 (42.57297°)

According to the Table 7 it can be observed that for the both median and the 3rd quartile, when shape parameter λ increases the optimal number of groups increase. The goal of designing the acceptance sampling plans is to obtain the optimal number of groups with the minimum angle. In this scenario $\lambda = 1$ produces optimal number of groups for both the quality parameters.

From the comparison of the performance of GChSP-1 with the two different quality parameters, median and the 3rd quartile with the design parameters $\left(\lambda = 1, \frac{Q}{Q_0} = 12, i = 1, r = 2, a = 0.25\right)$, it can be observed that the 3rd quartile produces 5 groups with the corresponding minimum angle of 16.75498° for GChSP-1 and the median produces 10 groups with the minimum angle of 9.368341°. By comparing the optimal number of groups produced by the two quality parameters for GChSP-1, it is sure that the 3rd quartile produces smaller number of groups (5 groups) than the median (10 groups). Finally, the findings ensure that the 3rd quartile produces the minimum number of groups for GChSP-1 rather than median while satisfying the requirements of MAM for given design parameters.

5. Conclusion

The purpose of this paper is to develop a novel GChSP-1 for the generalized exponential distribution for non-symmetrical data using minimum angle method using 3rd quartile as the quality parameter. The 3rd quartile ratio is used as the quality parameter to assure the hypothesized life of the items as the previous study has focused on the median. Thus, both of the quality parameters were finally compared to check the efficient quality parameter to satisfy the industry

personals to make sure a choice of quality parameter with reduced cost of and time of inspection under the natural non-symmetrical property of the data.

The optimal number of groups depends on five parameters such that the optimal number of groups is increasing while the shape parameter and the 3rd quartile ratio are increasing. Conversely, when the specified constant, number of preceding lots and number of items in the group is increasing the optimal number of groups are decreasing. The purpose of designing any acceptance sampling plan is to obtain minimum number of samples from the lot. In the case of proposed GChSP-1, it aims to obtain optimal number of groups with smallest angle. This paper proves that smaller values of shape parameter always produce smaller number of groups than the higher values of the shape parameter.

Finally, the comparison is made with the proposed GChSP-1 and the GChSP-1 with the median. The comparison ensures that that the 3rd quartile produces the minimum optimal number of groups rather than median for the GChSP-1 while satisfying the requirements of MAM. Therefore, it can be concluded that the proposed GChSP-1 can be applied as an alternative in the industry.

The aim of proposed GChSP-1 is to obtain the minimum sample sizes along with reducing both consumer's and producer's risks, and to enhance time and cost efficiency. Financially, GChSP-1 contributes to cost savings in the context of multiple inspections, aligning with organizational goals of productivity enhancement and operational cost reduction. This can be considered as a practical application of digital advancements in quality control aspects, optimizing industrial processes and financial outcomes through efficient acceptance sampling.

References

1. Aboobucker, H. M. (2023). New Family of Group Chain Acceptance Sampling Plans (GChSP) Using Minimum Angle Method (MAM) for Non-symmetrical Data. (Unpublished Master dissertation.) Universiti Utara Malaysia, Sintok, Kedah, Malaysia.

2. Aslam, M., & Jun, C. (2009). A Group Acceptance Sampling Plans for Truncated Life Tests based on the Inverse Rayleigh and Log-Logistic Distributions. *Pakistan Journal of Statistics, 25*(2), 107-119.

3. Epstein, B. (1954). Truncated life tests in the exponential case. *The Annals of Mathematical Statistics, 25*(3), 555-564.

4. Govindaraju, K., & Lai, C. (1998). A Modified ChSP-1 Chain Sampling Plan, MChSP-1, with very Small Sample Sizes. *American Journal of Mathematical and Management Sciences, 18*(3 & 4), 343-358.

5. Gupta, S. (1962). Life Test Sampling Plans for Normal and Lognormal Distributions. *American Statistical Association and American Society for Quality, 4*(2), 151-175.
6. Montgomery, D. C. (2009). *Introduction to Statistical Quality Control.* United States of America: John Wiley & Sons.

7. Mughal, A., Zain, Z., & Aziz, N. (2015). Time Truncated Generalized Chain Sampling Plan for Pareto Distribution of the 2nd Kind. *Research Journal of Applied Sciences, Engineering and Technology, 11*(3), 343-346.

8. Mughal, A., Zain, Z., & Aziz, N. (2015). Time Truncated Group Chain Sampling Strategy for Pareto Distribution of the 2nd Kind. *Research Journal of Applied Sciences, Engineering and Technology, 10*(4), 471-474.

9. Ramaswamy, A., & Jayasri, S. (2015). Time Truncated Modified Chain Sampling Plan for Selected Distributions. *International Journal of Research in Engineering and Science (IJRES), 3*(3), 01-18.

10. Rao, G., Kantam, R., Rosaiah, K., & Reddy, J. (2012). Acceptance Sampling Plans for Percentiles based on the Inverse Rayleigh Distribution. *Electronic Journal of Applied Statistical Analysis, 5*(2), 164-177.

11. Soundararajan, V., & Christina, A. (1997). Selection of single sampling variables plans based on the Minimum Angle. *Journal of Applied Statistics, 24*(2), 207-217.

12. Teh, M., Aziz, N., & Zain, Z. (2021). A New Method in Designing Group Chain Acceptance Sampling Plans(GChSP) for Generalized Exponential Distribution. *International Journal of Quality & Reliability Management, 38*(5), 1116-1129.

13. Teh, M., N., A., & Z., Z. (2018). Group Chain Sampling Plans beased on Truncated Life Test for Exponential Distribution. *International Journal of Pure and Applied Mathematics, 119*(3), 491-500.

14. Zain, Z., & Aziz, N. (2019). Constructing Two-Sided Group Chain Acceptance Sampling Plans for Non-Symmetrical Data. *International Journal of Supply Chain Management, 8*(5), 2051-3771.